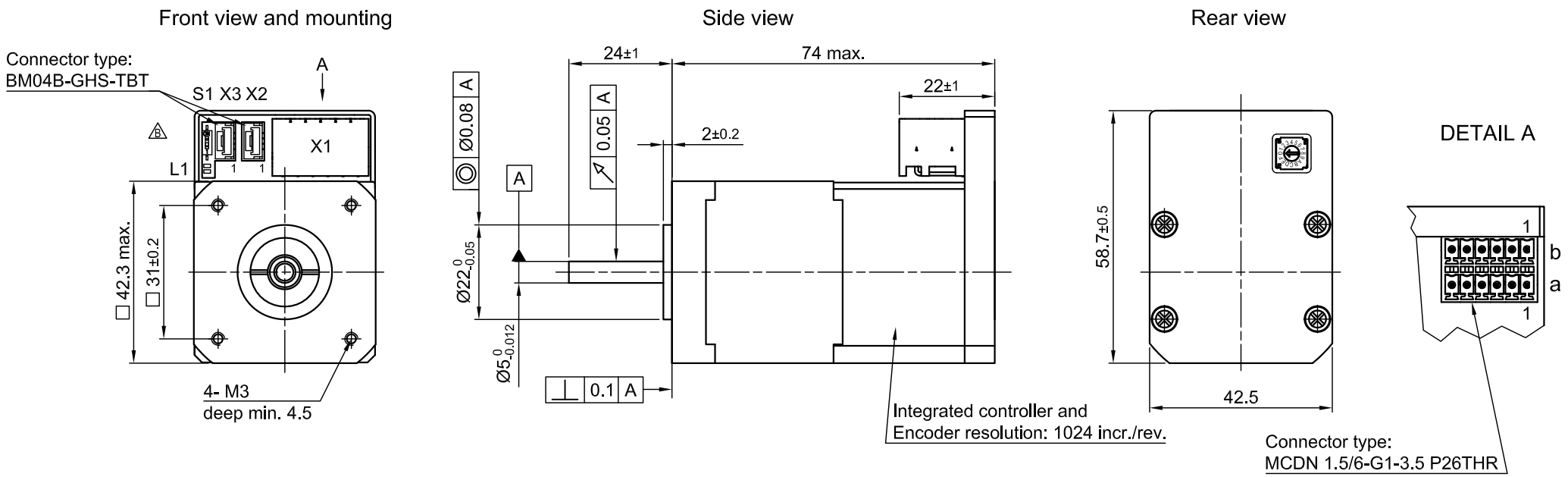

SPECIFICATION \ CONNECTION	BIPOLAR
VOLTAGE (VDC)	12 TO 48
AMPS/PHASE	1.8A
HOLDING TORQUE (Nm) [lb-in]	0.5 [4.425]
DETENT TORQUE (Nm) [lb-in]	0.022 [0.195]
STEP ANGLE (°) ± ACCURACY	1.8±5% TO MICROSTEP
WEIGHT (Kg) [lb]	0.5 [1.1]

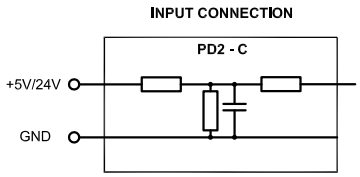

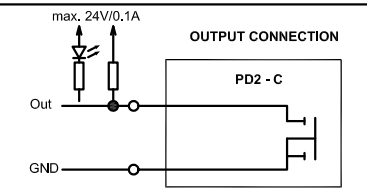

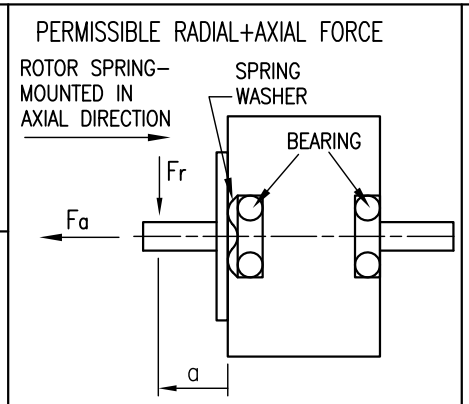

X1/Phönix MINI COMBICON Double-Level	
Pin No.	Function
a1	GND
a2	+UB (12-48V)
a3	INPUT 1 (5V/24V)
a4	INPUT 2 (5V/24V)
a5	INPUT 3 (5V/24V)
a6	INPUT 4 (5V/24V)
b1	GND
b2	+10V VOLTAGE SUPPLY
b3	ANALOG INPUT (0-10V/0-20mA)
b4	OUTPUT 1 (open drain)
b5	OUTPUT 2 (open drain)
b6	OUTPUT 3 (open drain)

X2 AND X3/JST GH 4 POLE	
Pin No.	Function
1	+UB_LOGIC(24V)
2	CAN+
3	CAN-
4	GND

OVERTEMPERATURE PROTECTION (ELECTRONICS): 75°C
AMBIENT TEMPERATURE -10°~ 50°C [14°F ~ 122°F]
INSULATION RESISTANCE 100 MOhm (UNDER NORMAL TEMPERATURE AND HUMIDITY)
INSULATION CLASS B 130° [266°F]
DIELECTRIC STRENGTH 500VAC FOR 1 MIN. (BETWEEN THE MOTOR COILS AND THE MOTOR CASE)
AMBIENT HUMIDITY MAX. 85% (NO CONDENSATION)

AXIAL-FORCE Fa (N)	Fa=7	
DISTANCE a (mm)	20	
RADIAL-FORCE Fr (N)	20	
	AXIAL	RADIAL
SHAFT PLAY (mm)	0.1	0.02
AT LOAD MAX: (N)	30	4.5

REV	DESCRIPTION	DATE	DRN
B	–	08.12.15	A.S.
A	–	02.07.15	A.S.

Yanlanmc®
For smarter equip

Surface specification DIN ISO 1302 | General tolerances DIN ISO 2768- cH | Work piece edge DIN ISO 13715

APVD	X.W.	03.11.14
CHKD		
DRN	J.D.	03.11.14
SIGNATURE		DATE

PLUG&DRIVE MOTOR

DWG.NO
PD2-C4118L1804-E-08-CYL