Front view and mounting

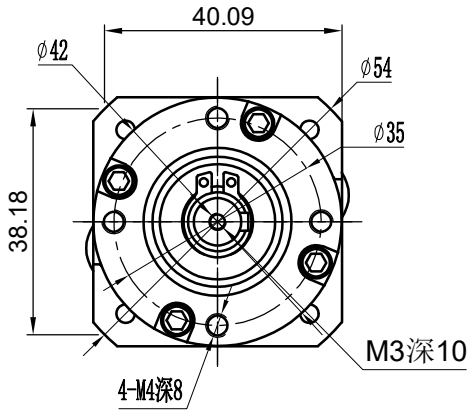

Side view

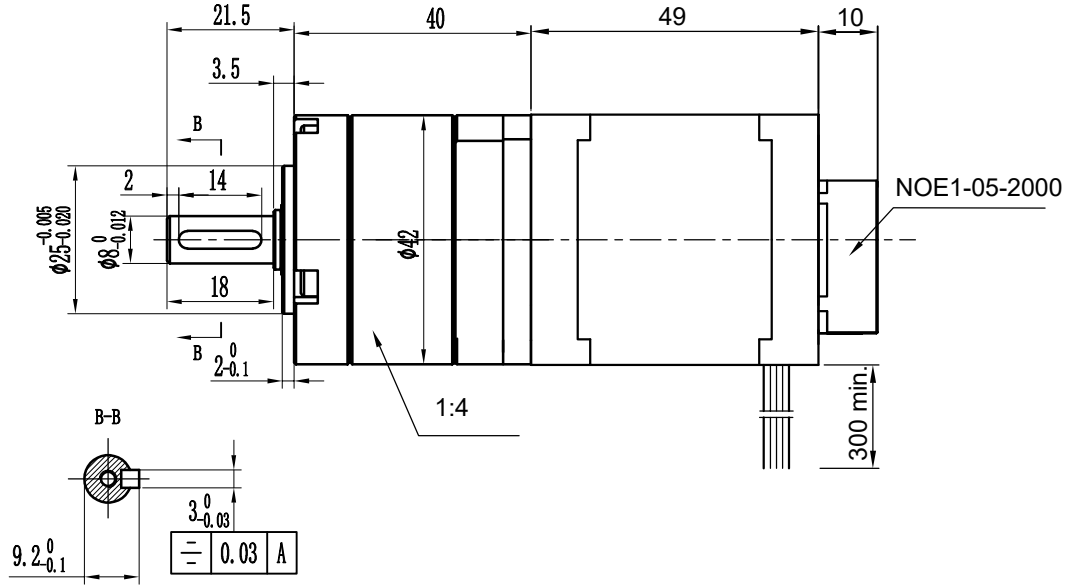

Rear view

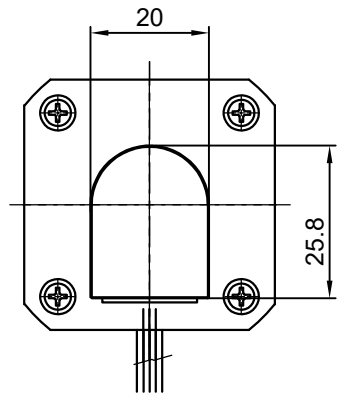

SPECIFICATION \ CONNECTION	BIPOLAR
VOLTAGE (VDC)	1.9
AMPS/PHASE	3.0
RESISTANCE/PHASE (Ohms)@25°C	0.63±15%
INDUCTANCE/PHASE (mH) @1KHz	1.03±20%
HOLDING TORQUE (Nm) [lb-in]	0.5 [4.43]
DETENT TORQUE (Nm) [lb-in]	2.2×10^{-2} [0.2]
STEP ANGLE (°)	1.8
STEP ACCURACY (NON-ACCUM)	±5%
ROTOR INERTIA (Kg-m²) [lb-in²]	8.2×10^{-6} [2.8×10^{-2}]
WEIGHT (Kg) [lb]	0.34 [0.77]

PERMISSIBLE RADIAL+AXIAL FORCE

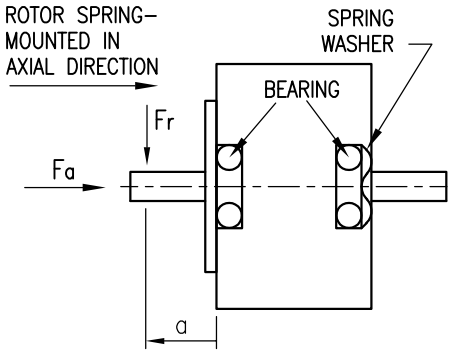

AXIAL-FORCE Fa (N)	Fa=7			
DISTANCE a (mm)	5	10	15	20
RADIAL-FORCE Fr (N)	58	36	26	20
	AXIAL		RADIAL	
SHAFT PLAY (mm)	0.08		0.02	
AT LOAD MAX: (N)	4.5		4.5	

TEMPERATURE RISE: MAX.80°C (MOTOR STANDSTILL; FOR 2 PHASE ENERGIZED)
AMBIENT TEMPERATURE -10°~ 50°C [14°F ~ 122°F]
INSULATION RESISTANCE 100 MOhm (UNDER NORMAL TEMPERATURE AND HUMIDITY)
INSULATION CLASS B 130° [266°F]
DIELECTRIC STRENGTH 500VAC FOR 1 MIN. (BETWEEN THE MOTOR COILS AND THE MOTOR CASE)
AMBIENT HUMIDITY MAX. 85% (NO CONDENSATION)

TYPE OF CONNECTION (EXTERN)		MOTOR	
PIN NO	BIPOLAR	LEADS	WINDING
1	A —	BLK	A
2	A\ —	GRN	A\
3	B —	RED	B
4	B\ —	BLU	B\

FULL STEP 2 PHASE-Ex.,
WHEN FACING MOUNTING END (X)

STEP	A	B	A\	B\		CCW
1	+	+	−	−	↓	↑
2	−	+	+	−		
3	−	−	+	+		
4	+	−	−	+	CW	

WIRING DIAGRAM

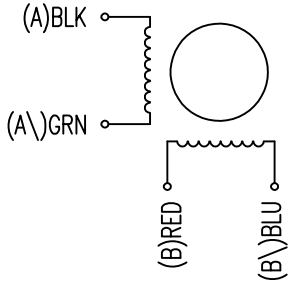

REV	DESCRIPTION	DATE	DRN

Surface specification DIN ISO 1302 | General tolerances DIN ISO 2768-cH | Work piece edge DIN ISO 13715

	SIGNATURE	DATE
APVD		
CHKD		
DRN		

STEPPING MOTOR

DWG.NO YL4218L3004-E2000-G4