外部驱动式滚珠直线步进电机–57MBG

External Linear Actuator With Ball Screw – NEMA 23

TORQUE CURVE

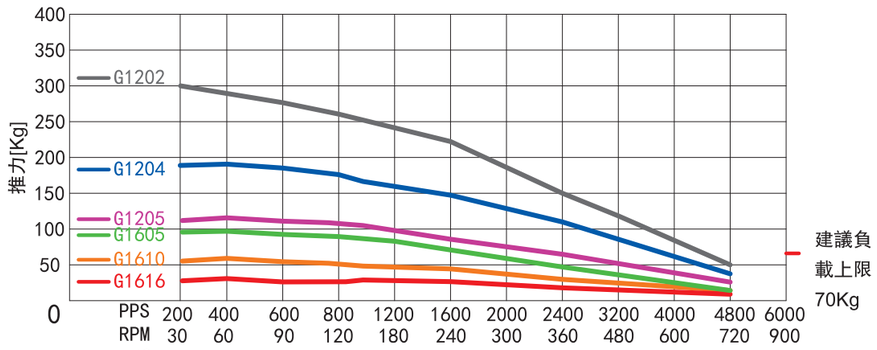

	PPS	200	400	600	800	1200	1600	2000	2400	3200	4000	4800	6000
	RPM	30	60	90	120	180	240	300	360	480	600	720	900
G1202	mm/S	1	2	3	4	6	8	10	12	16	20	24	30
G1204	mm/S	2	4	6	8	12	16	20	24	32	40	48	60
G1205	mm/S	2.5	5	7.5	10	15	20	25	30	40	50	60	75
G1605	mm/S	2.5	5	7.5	10	15	20	25	30	40	50	60	75
G1610	mm/S	5	10	15	20	30	40	50	60	80	100	120	150
G1616	mm/S	8	16	12	32	48	64	80	96	128	160	192	240

贯通轴式滚珠直线步进电机–57MBTG

Through–shaft Linear Actuator With Ball Screw – NEMA 23

NEMA 23（56mm）一体式滚珠丝杠和电机，不带联轴器，还提供用于位置反馈的内置高精度编码器。精密线性轴的理想选择

NEMA 23 (56 mm) integrated ball screw and motor without coupling.A built–in high–precision encoder for position feedback is also available. Ideal for precision linear axes

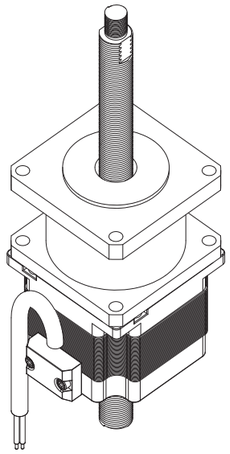

◎ Feature

- Integrated ball screw & motor 集成滚珠丝杠和电机
- Longer life and higher accuracy 更长的寿命和更高的精度
- Different lengths available 提供不同长度
- A built–in encoder available. 提供内置编码器。
- Motor Controllers / Drives available 电机控制器/驱动器可用
- 0.0025mm/step with our controller 使用我们的控制器为0.0025mm /步

◎ VERSIONS

系列代码 Series models	57H45MBTG	57H56MBTG	57H76MBTG
相电流 Current per Winding A	2.0	3.0	4.0
静力矩 Holding Torque mN.m	0.7	1.3	1.6
相电阻 Resistance per Winding Ohm	1.63	1.1	0.5
相电感 Inductance per Winding mH	5.8	3.2	1.25
转子惯量 Rotor Inertia gcm^2	155	280	460
电机重量 Weight kg	0.5	0.63	1
电机高度 Length “L“ mm	45	56	76
螺杆长度 Screw length*L1	Different lengths available	Different lengths available	Different lengths available
反馈装置 Feedback	Encoder(Closed–loop version)	Encoder(Closed–loop version)	Encoder(Closed–loop version)

订货代号 ORDER IDENTIFIER

56H45MBTG1202E2000–L1

MBG0601=Ball Screw code
丝杠代码

L1 = Screw length
丝杠长度

E2000=Encoder resolution(Optional)
编码器分辨率（可选）

可选螺杆 Screw optional

螺杆代码 Screw	直径（mm） Diameter	导程（mm） Screw lead
G1202	12	2
G1204	12	4
G1205	12	5

可选配件 ACCESSORIES

ZK–ENC–500 Encoder Cable 0.5m
*Length can be customized
Motor Controllers / Drives

贯通轴式滚珠直线步进电机–57MBTG

Through–shaft Linear Actuator With Ball Screw – NEMA 23

DIMENSIONS (IN MM)

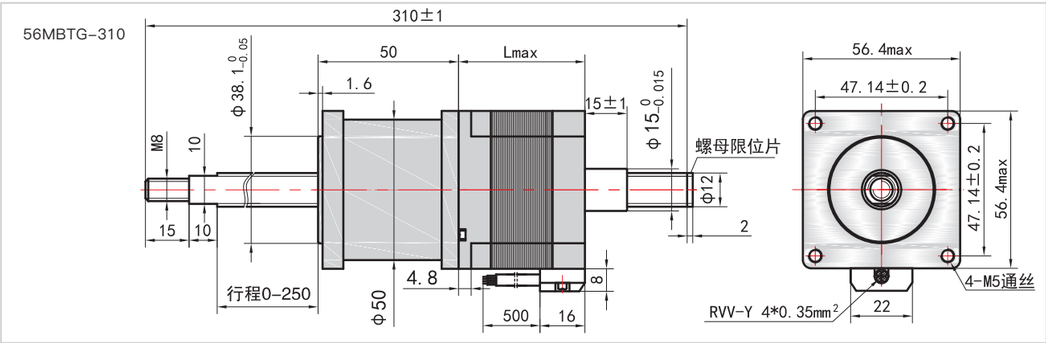

DIMENSIONS WITH ENCODER (IN MM)

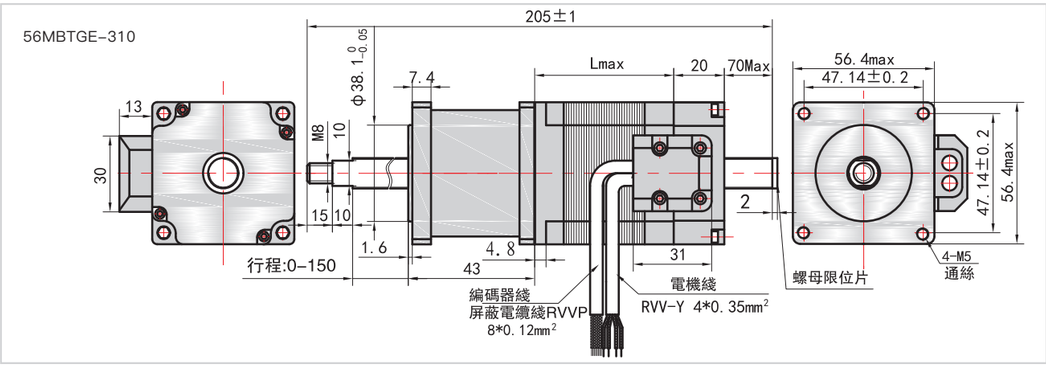

外部驱动式滚珠直线步进电机–86MBG

External Linear Actuator With Ball Screw – NEMA 34

高扭矩nema34混合式步进电机+滚珠丝杠。 直接连接无需耦合。 提供内置编码器版本。精密线性轴的理想选择

High torque nema34 hybrid stepper motor + ball screw. No coupling is required for direct connection. Built–in encoder version available. Ideal for precision linear axes

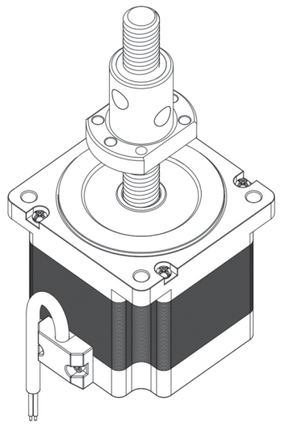

◎ Feature

- Integrated ball screw & Nema34 motor 集成滚珠丝杠和Nema34电机
- Longer life and higher accuracy 更长的寿命和更高的精度
- Different lengths available 提供不同长度
- A built–in encoder available. 提供内置编码器。
- Motor Controllers / Drives available 电机控制器/驱动器可用
- 0.0025mm/step with our controller 使用我们的控制器为0.0025mm /步

◎ VERSIONS

系列代码 Series models	86H76MBG	86H98MBG
相电流 Current per Winding A	4.0	6.0
静力矩 Holding Torque mN.m	3.5	7.0
相电阻 Resistance per Winding Ohm	0.5	0.4
相电感 Inductance per Winding mH	3.7	3.8
转子惯量 Rotor Inertia gcm²	1400	1700
电机重量 Weight kg	1.4	2.7
电机高度 Length “L“ mm	76	98
螺杆长度 Screw length*L1	Different lengths available	Different lengths available
反馈装置 Feedback	Encoder(Closed–loop version)	Encoder(Closed–loop version)

订货代号 ORDER IDENTIFIER

86H76MBG1605E2000–L1

MBG0601=Ball Screw code
丝杠代码

L1 = Screw length
丝杠长度

E2000=Encoder resolution(Optional)
编码器分辨率（可选）

可选螺杆 Screw optional

丝杆代码 Screw	直径(mm) Diameter	导程(mm) Screw lead
G1605	16	5
G1610	16	10
G1616	16	16
G2005	20	5
G2020	20	20

可选配件 ACCESSORIES

ZK–ENC–500 Encoder Cable 0.5m
*Length can be customized
Motor Controllers / Drives